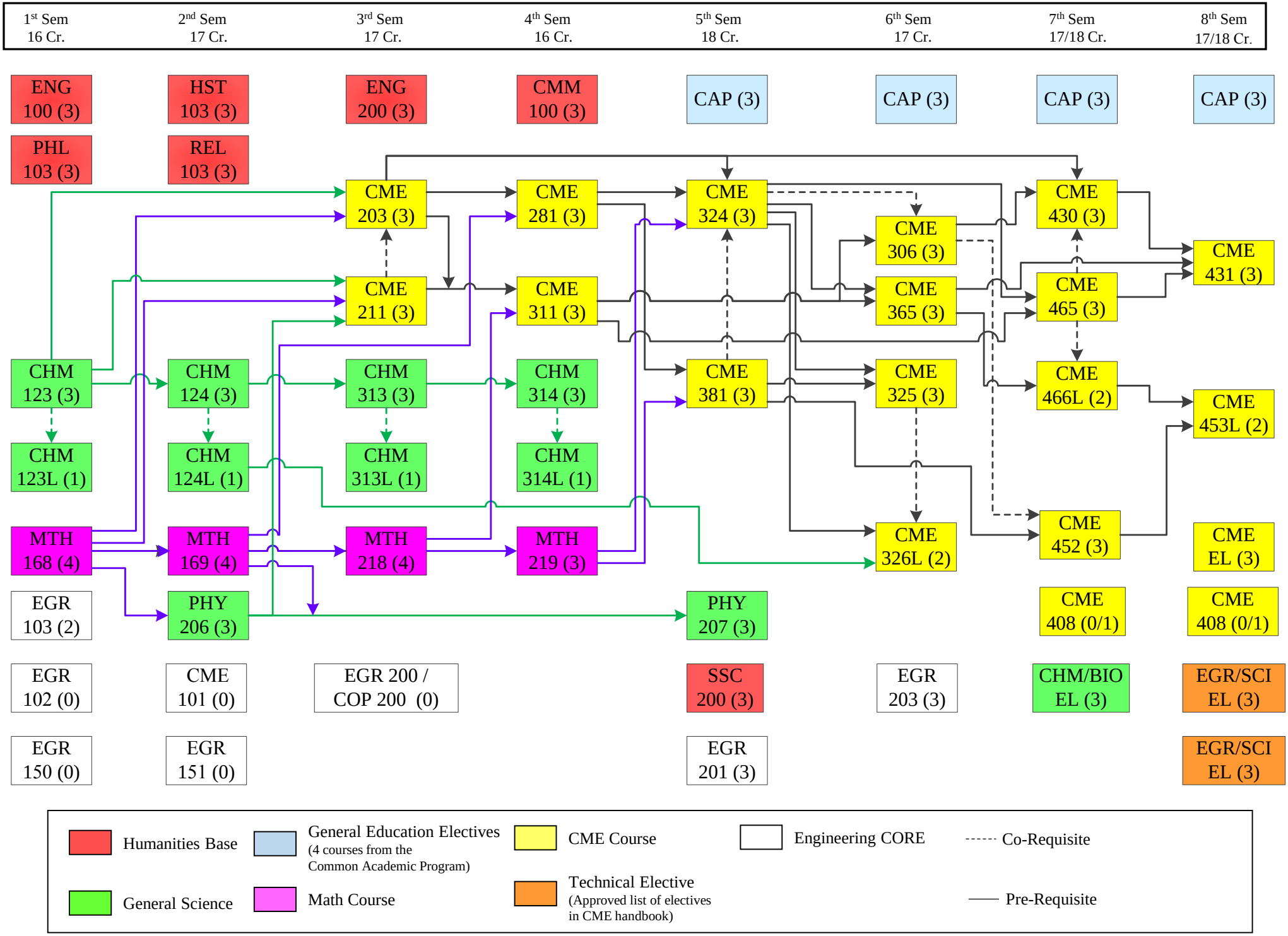Bachelor of Chemical Engineering 2018